Nov. 3, 1931. A. C. KRACKLAUER 1,830,664

FILTER

Filed Nov. 14, 1929

Fig. 1.

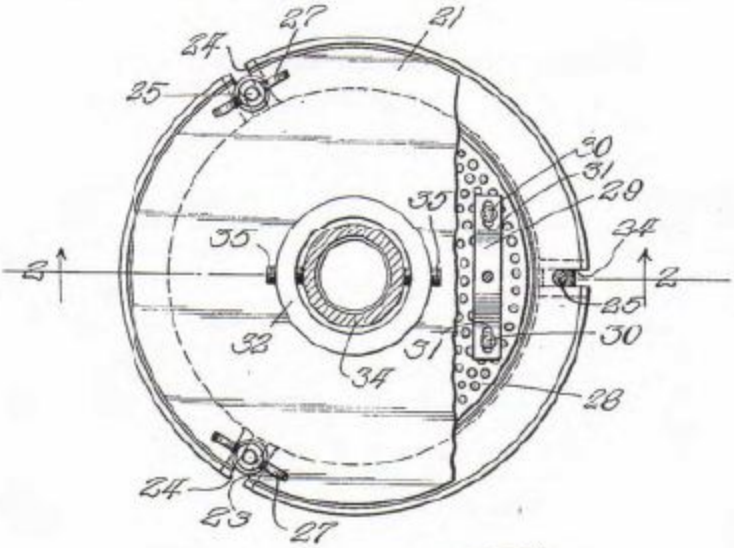

Fig. 2.

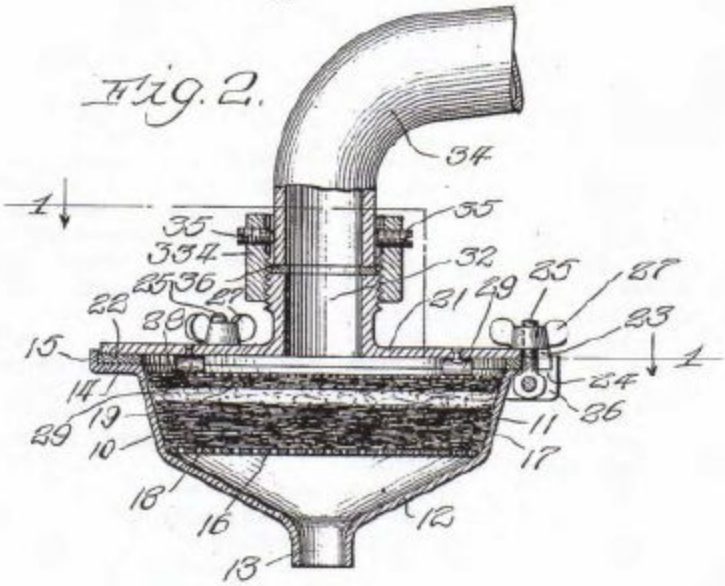

Inventor:
Aloysius C. Kracklauer,
By Banning & Banning
Attys.

April 7, 1942. A. C. KRACKLAUER 2,278,453

PLATE FILTER

Filed June 5, 1939

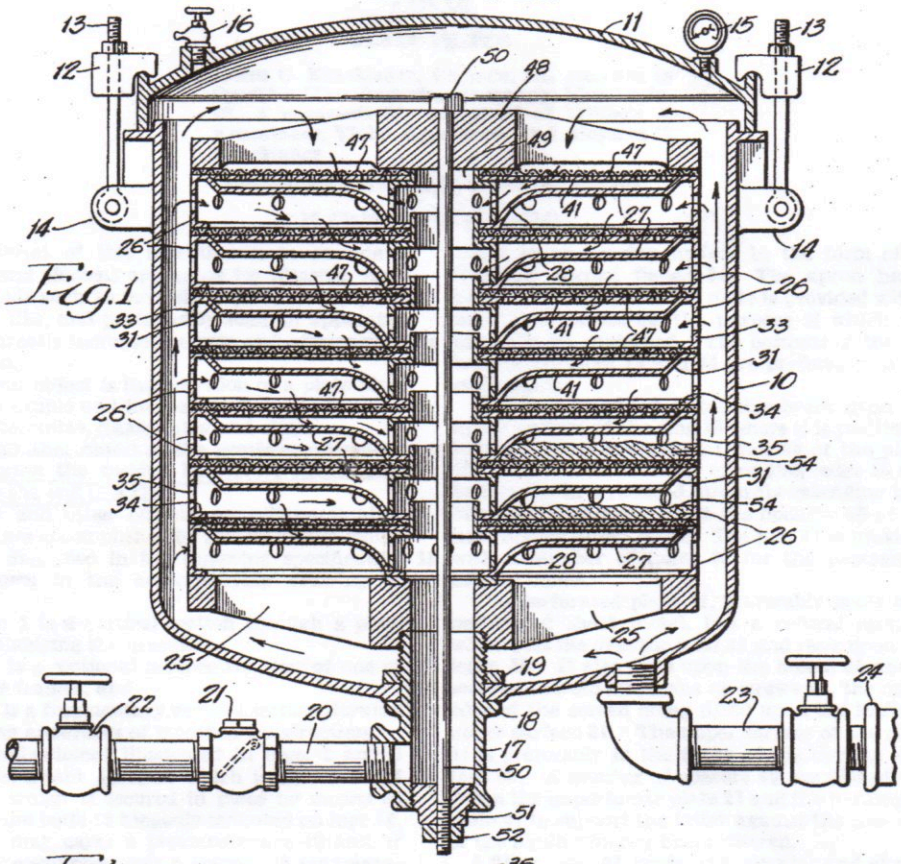

Fig. 1

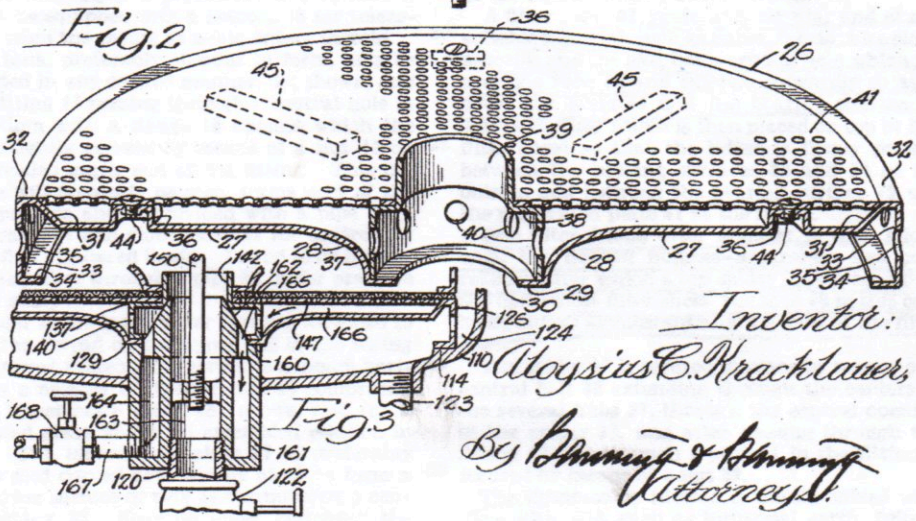

Fig. 2

Fig. 3

Inventor:
Aloysius C. Kracklauer,
By Bonning & Bonning
Attorneys.

July 3, 1945. A. C. KRACKLAUER 2,379,582

TUBE FILTER

Filed April 1, 1943

CYLINDRICAL WALL

C CASING

F

45 # WRAPS OF PAPER + DE

FABRIC/ACT. CARB

SACK

Fig. 1

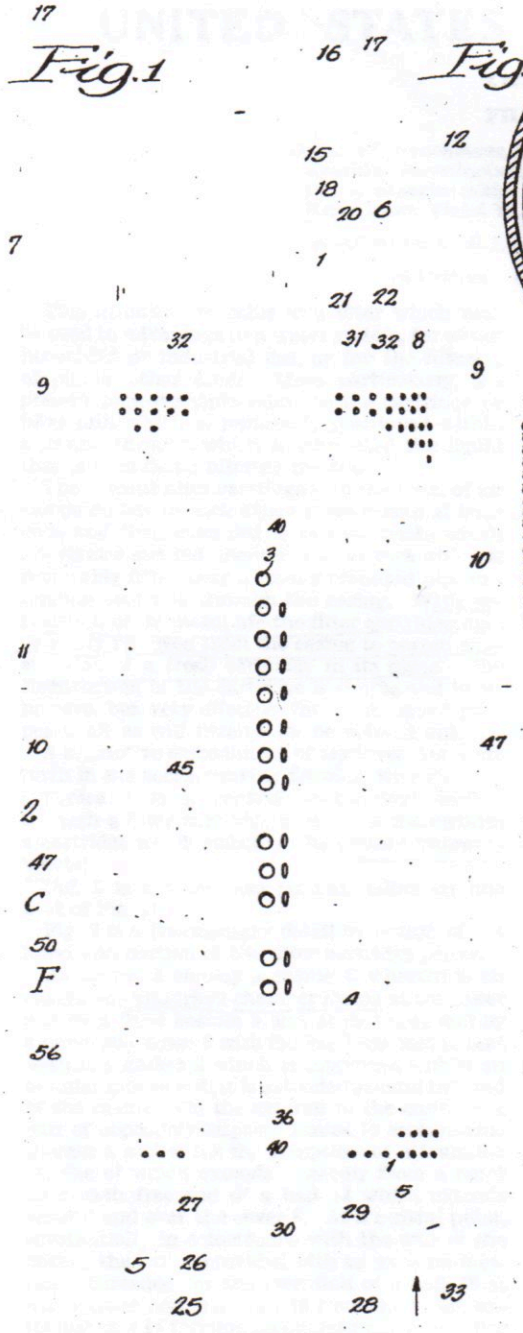

Fig. 2

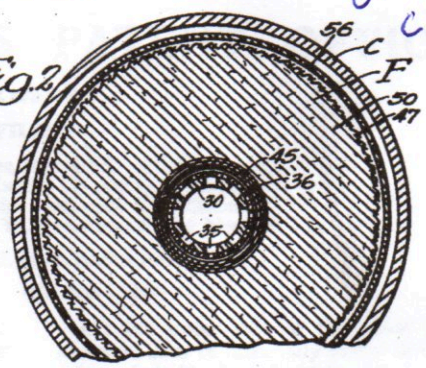

Fig. 3

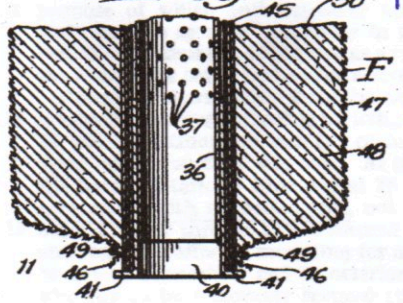

INVENTOR
ALOYSIUS C. KRACKLAUER

BY Banning and Banning
ATTORNEYS

Feb. 1, 1949. A. C. KRACKLAUER 2,460,423

FILTER

Filed March 26, 1945

Fig. 1

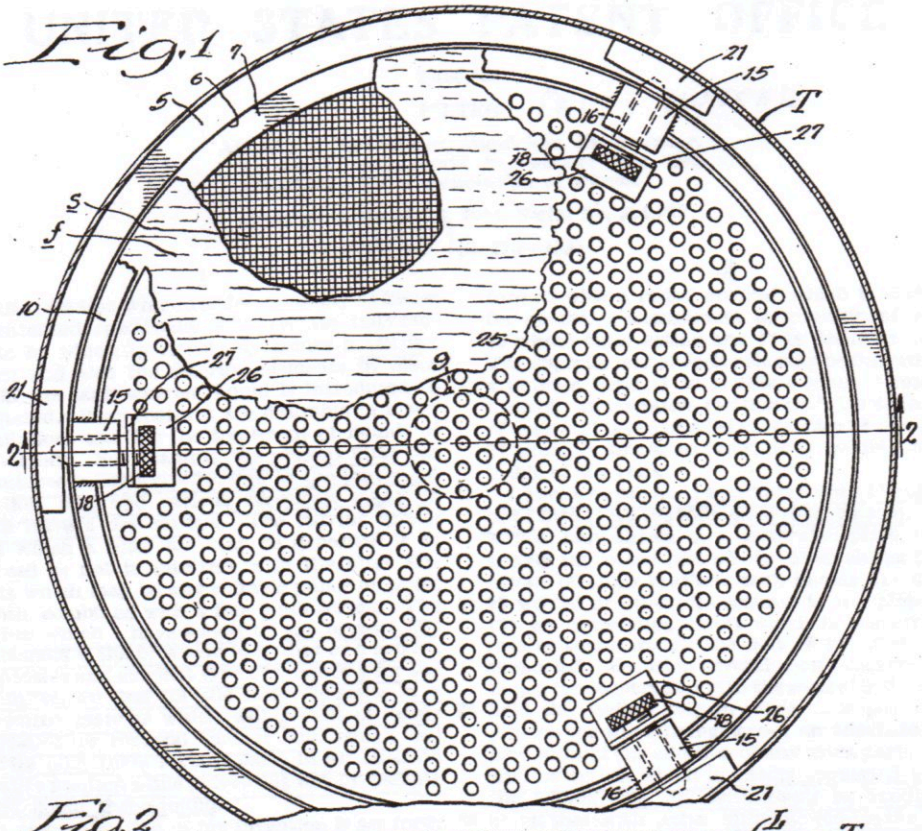

Fig. 2

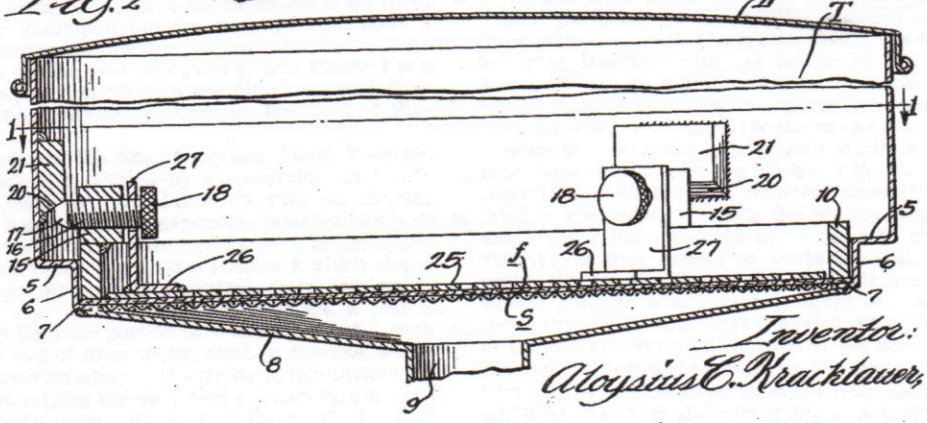

Inventor:
Aloysius C. Kracklauer,
By Manning & Manning & Robertson
Attorneys.

Jan. 16, 1951 A. C. KRACKLAUER 2,538,575

FILTER CLEANOUT MECHANISM

Filed May 13, 1949 2 Sheets-Sheet 1

Fig. 1.

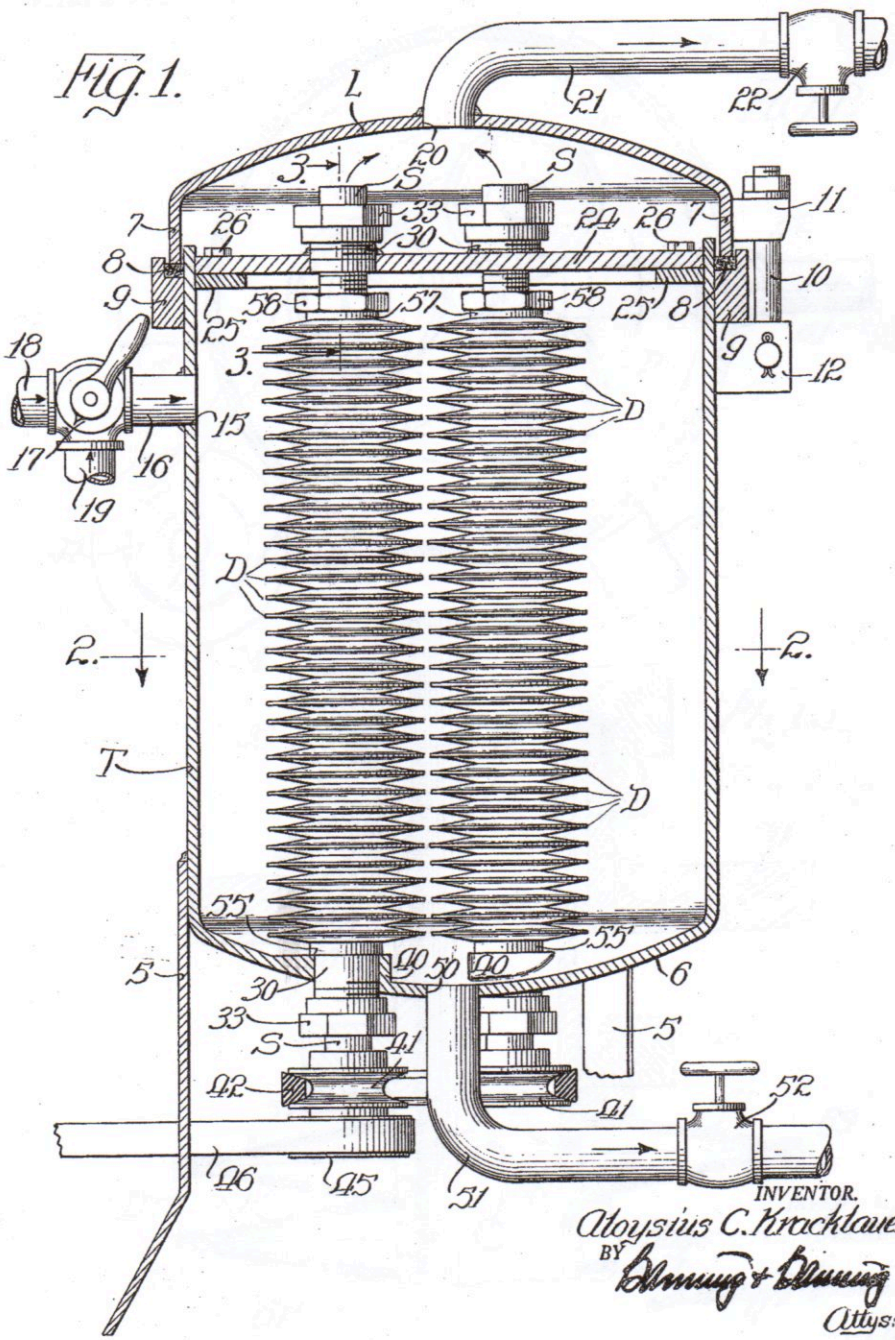

INVENTOR.
Aloysius C. Kracklauer
BY
Manning & Manning
Attys.

Oct. 28, 1952 A. C. KRACKLAUER 2,615,574

HORIZONTAL PLATE FILTER

Filed Sept. 9, 1950

Fig. 1.

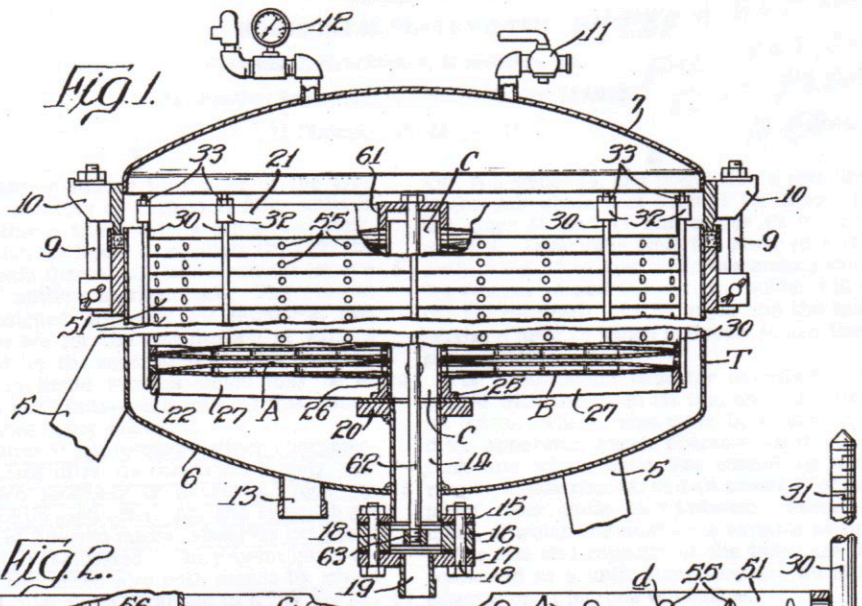

Fig. 2.

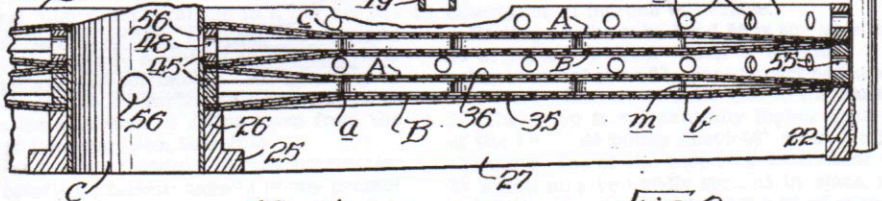

Fig. 3.

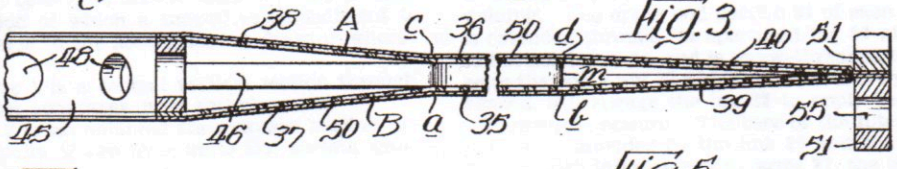

Fig. 4.

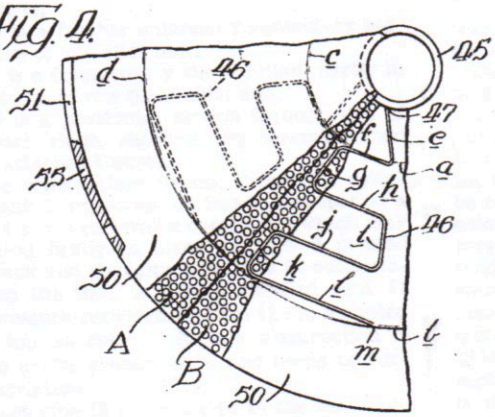

Fig. 5.

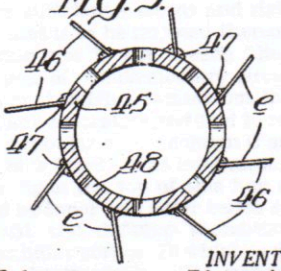

INVENTOR.

Aloysius C. Kracklauer

BY

Dehning & Dehning

Attys.

Dec. 16, 1952 A. C. KRACKLAUER 2,621,798

CLEAN-OUT MECHANISM FOR FILTERS AND THE LIKE SC FILTER

Filed July 13, 1951 2 SHEETS--SHEET 1

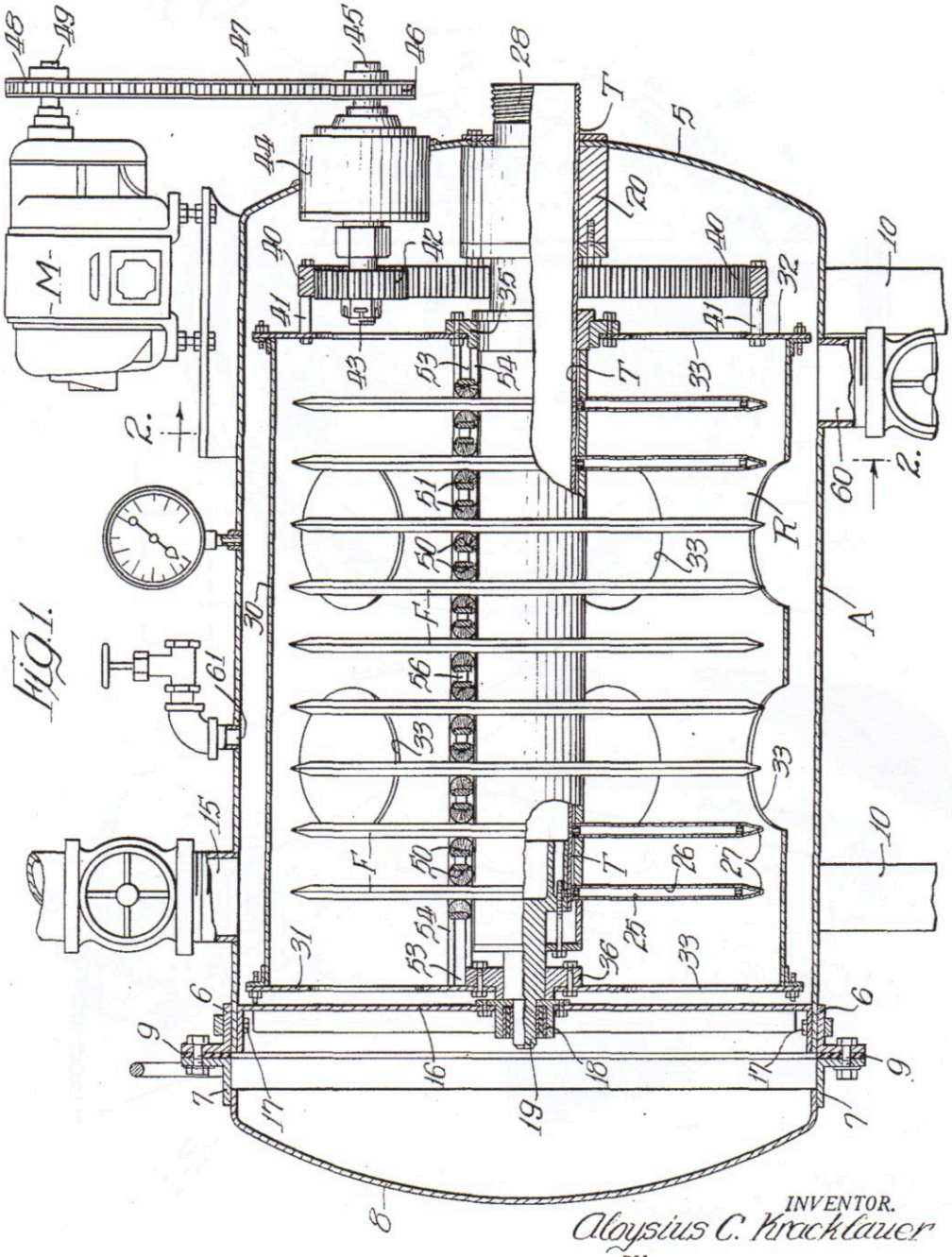

FIG. 1.

INVENTOR.
Aloysius C. Kracklauer
BY
Banning & Banning
Attys.

May 19, 1953 A. C. KRACKLAUER 2,639,251

PRODUCTION OF FILTER UNITS FOR A FILTER APPARATUS

Filed March 21, 1950

Fig. 1

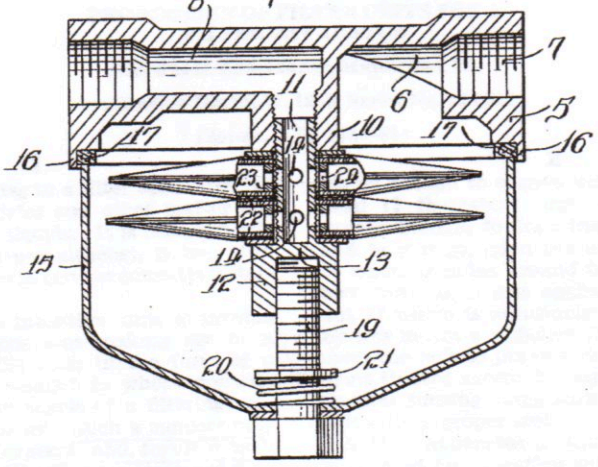

Fig. 2.

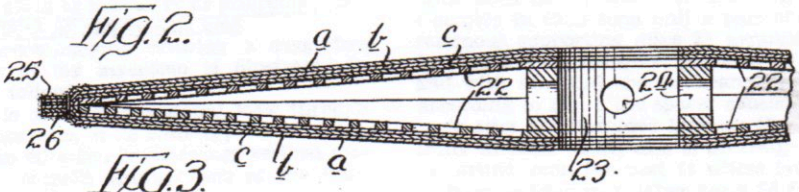

Fig. 3.

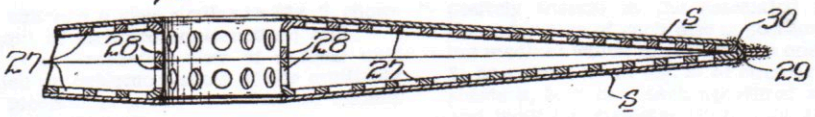

Fig. 4.

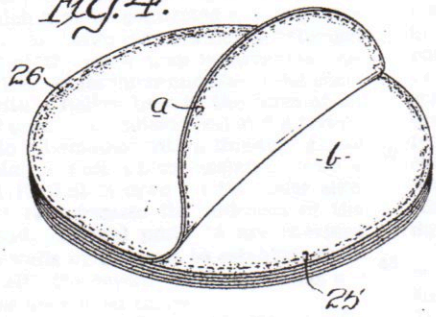

Fig. 5.

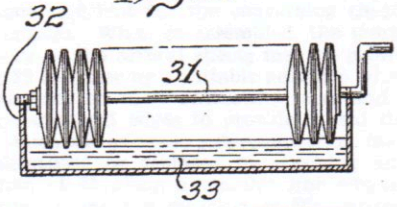

INVENTOR.

Aloysius C. Kracklauer

BY Banning & Banning

Attys

Jan. 6, 1953 A. C. KRACKLAUER 2,624,465

HORIZONTAL PLATE FILTER W/ GAS RELEASE PLATES

Filed May 6, 1950

FIG. 1.

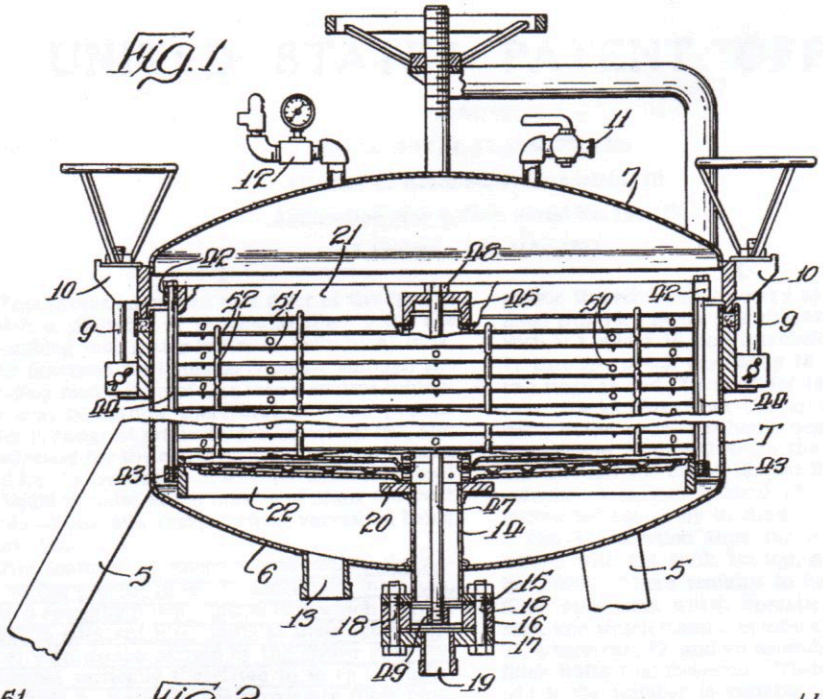

FIG. 2.

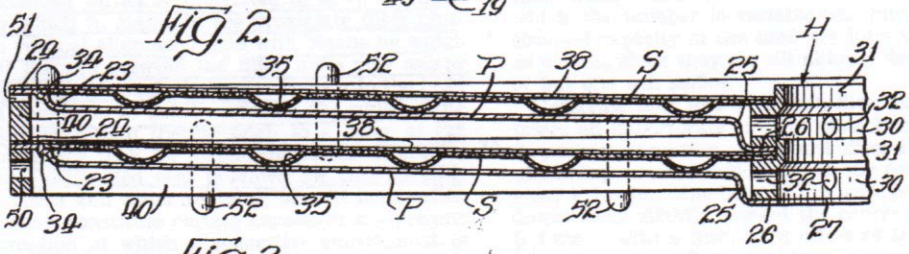

FIG. 3.

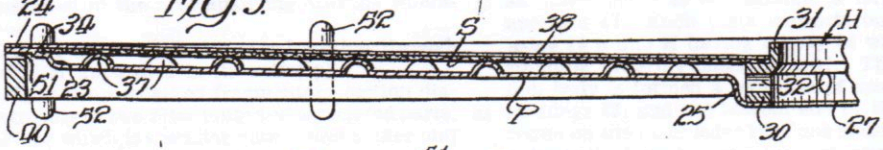

FIG. 4.

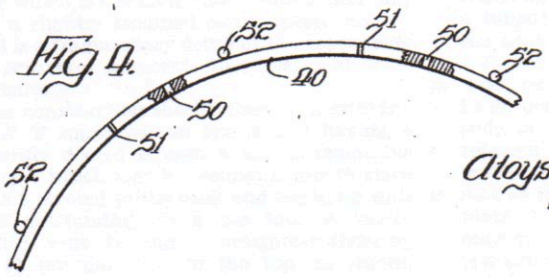

INVENTOR.

Aloysius C. Kracklauer

BY Banning & Banning

Attys.

Aug. 28, 1956 C. P. MIES, JR., ET AL 2,760,641

FILTERING APPARATUS 5 OF

Filed Sept. 25, 1951 3 Sheets-Sheet 1

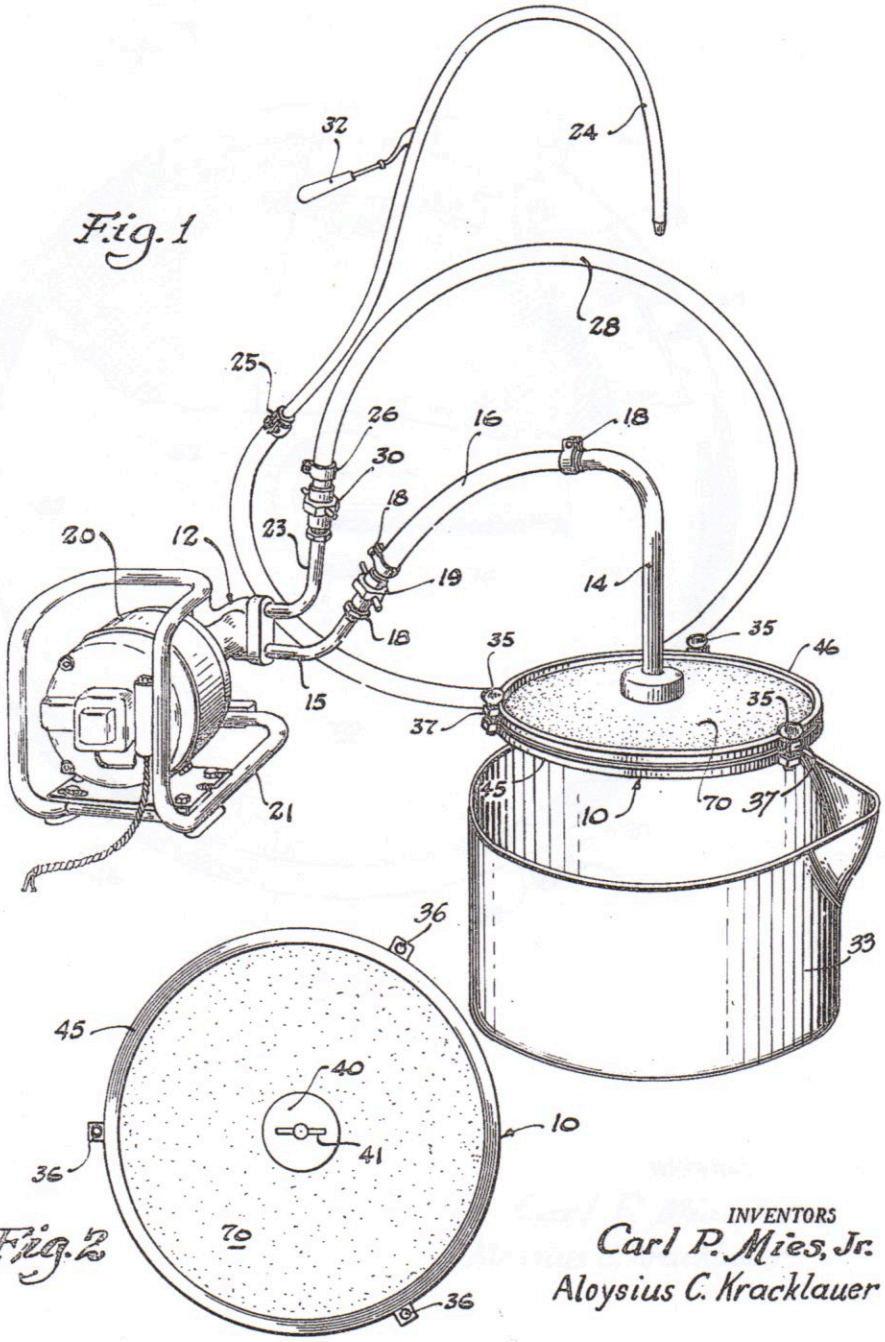

INVENTORS
Carl P. Mies, Jr.
Aloysius C. Kracklauer

Aug. 28, 1956 C. P. MIES, JR., ET AL 2,760,641

FILTERING APPARATUS

Filed Sept. 25, 1951 3 Sheets-Sheet 2

Fig. 3

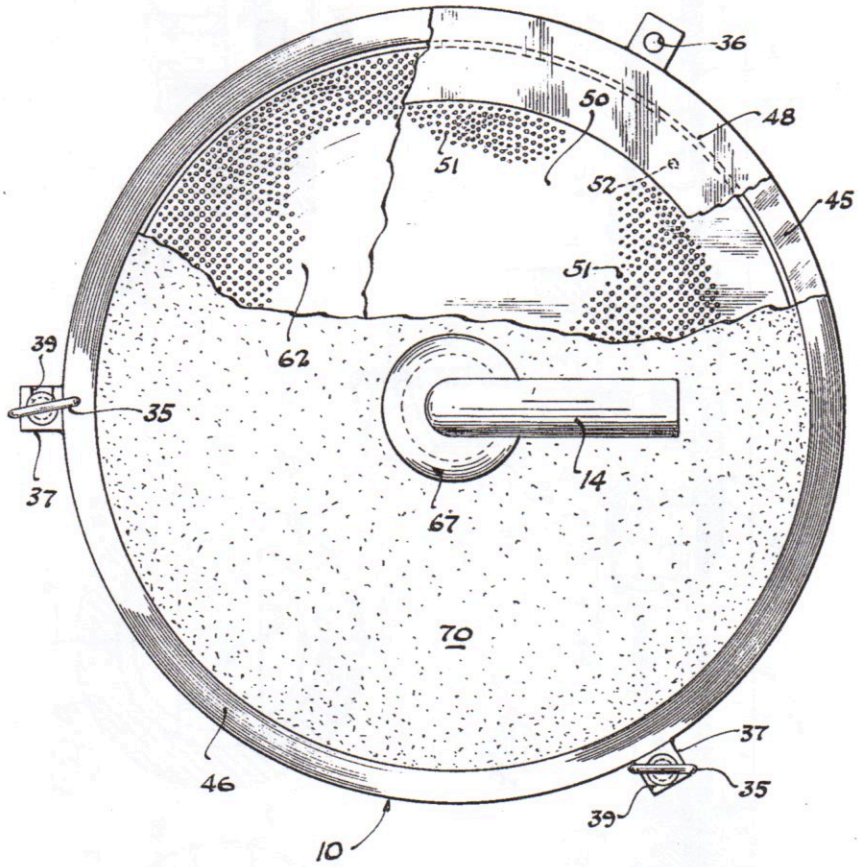

INVENTORS

Carl P. Mies, Jr.

Aloysius C. Kracklauer

Aug. 28, 1956 C. P. MIES, JR., ET AL 2,760,641

FILTERING APPARATUS

Filed Sept. 25, 1951 3 Sheets-Sheet 3

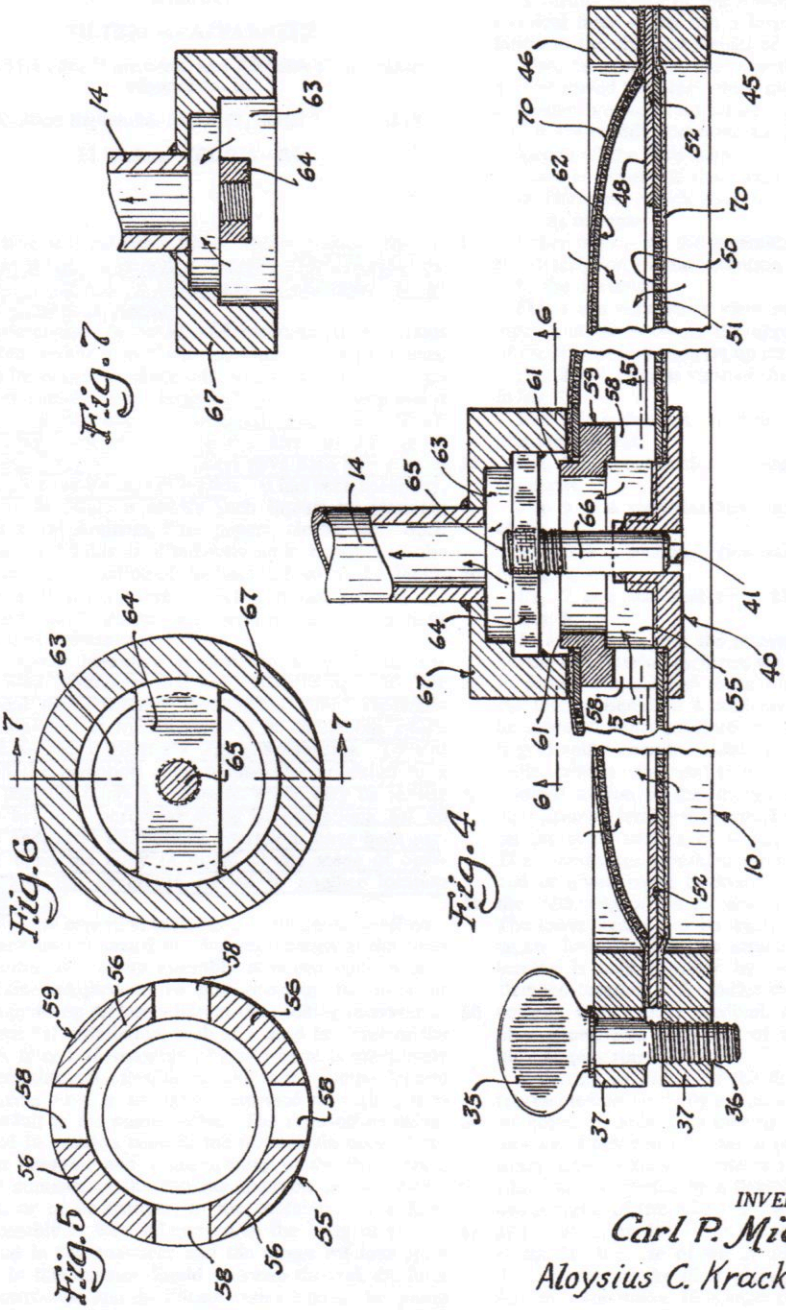

INVENTORS

Carl P. Mies, Jr.

Aloysius C. Kracklauer

Aug. 24, 1954 A. C. KRACKLAUER 2,687,217

HORIZONTAL PLATE FILTER "SPIDER" TOP RING

Filed Dec. 21, 1951

Fig. 1.

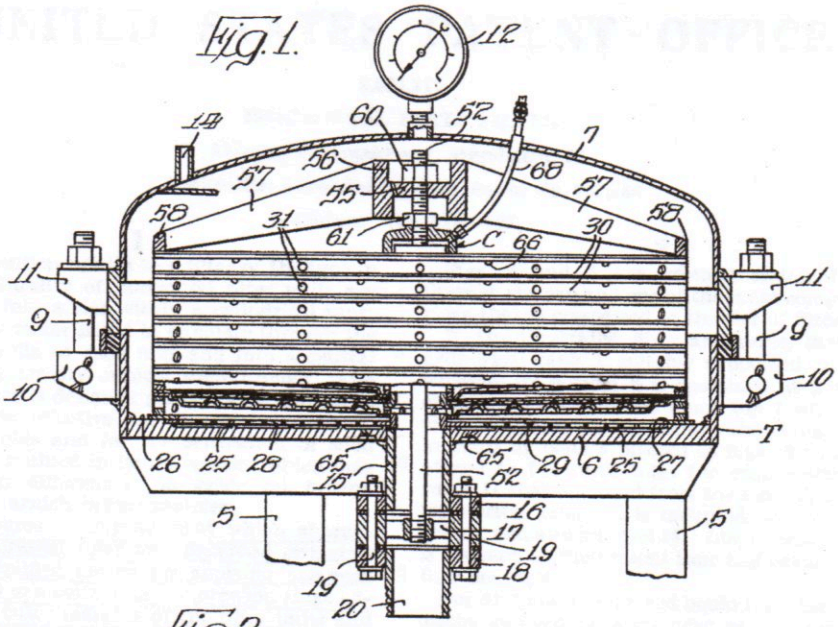

Fig. 2.

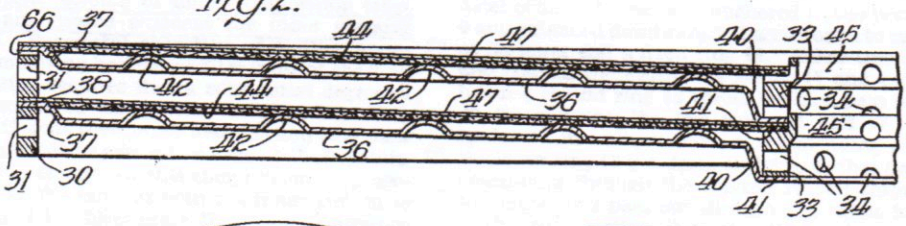

Fig. 3.

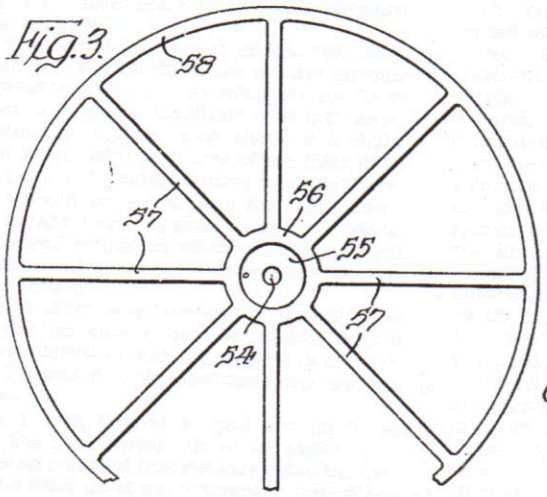

Fig. 4.

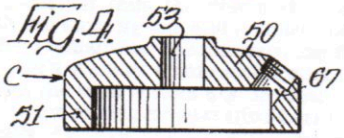

Fig. 5.

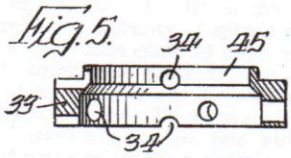

INVENTOR.
Aloysius C. Kracklauer
BY
Banning & Banning
Attys.

Oct. 18, 1955 A. C. KRACKLAUER 2,720,983

FILTER APPARATUS

Filed Feb. 23, 1952

OD MEDIUM CRIMPING

Fig. 1

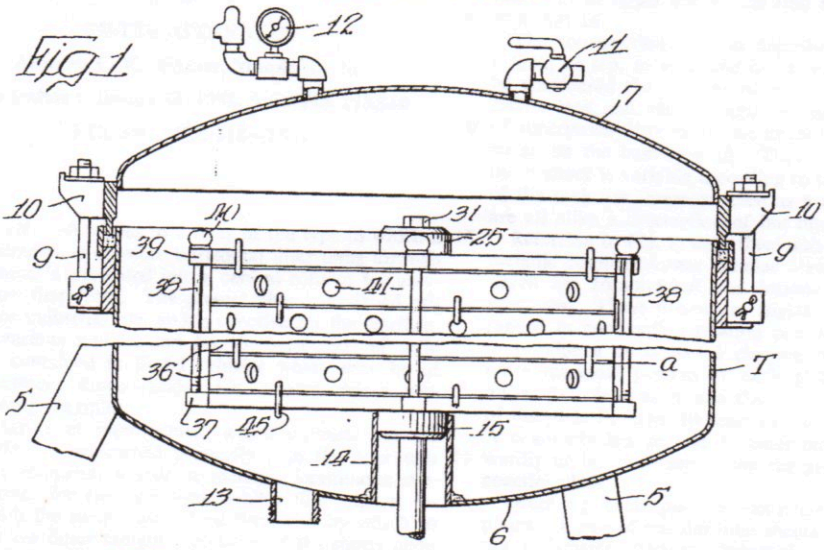

Fig. 2.

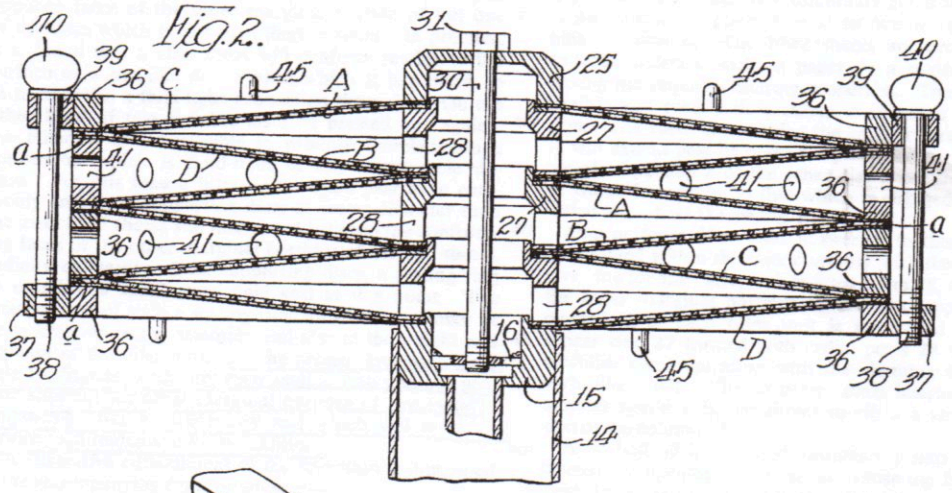

Fig. 3.

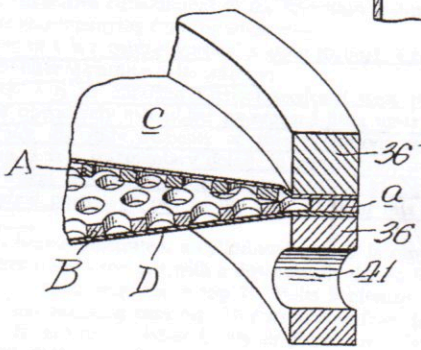

INVENTOR.
Aloysius C. Kracklauer
BY
Fleming & Fleming
Attys.

March 6, 1956 A. C. KRACKLAUER 2,737,300

WASH-OFF PLATE FILTER APPARATUS

BACKWASH SYSTEM

Filed March 26, 1952

Fig. 1.

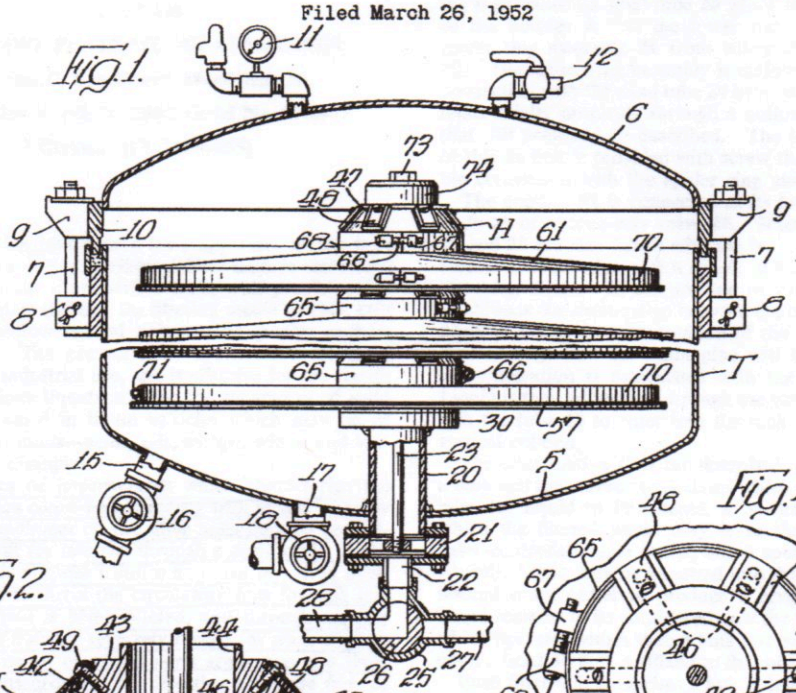

Fig. 4.

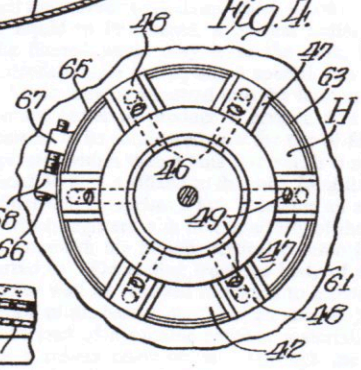

Fig. 2.

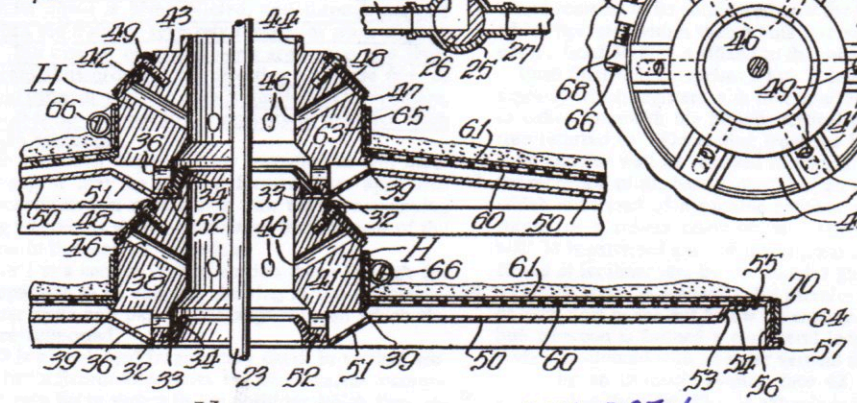

BACKWASH OPEN

Fig. 3.

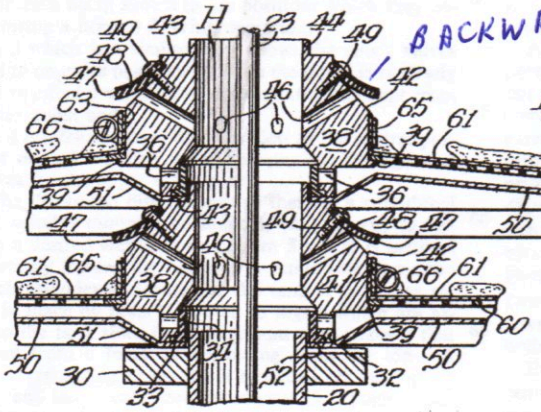

INVENTOR.

Aloysius C. Kracklauer

BY

Dunning & Dunning

Attys.

May 10, 1960 F. H. PASSALAQUA 2,936,093

QUICK OPENING TANK

Filed April 13, 1955 6 Sheets-Sheet 1

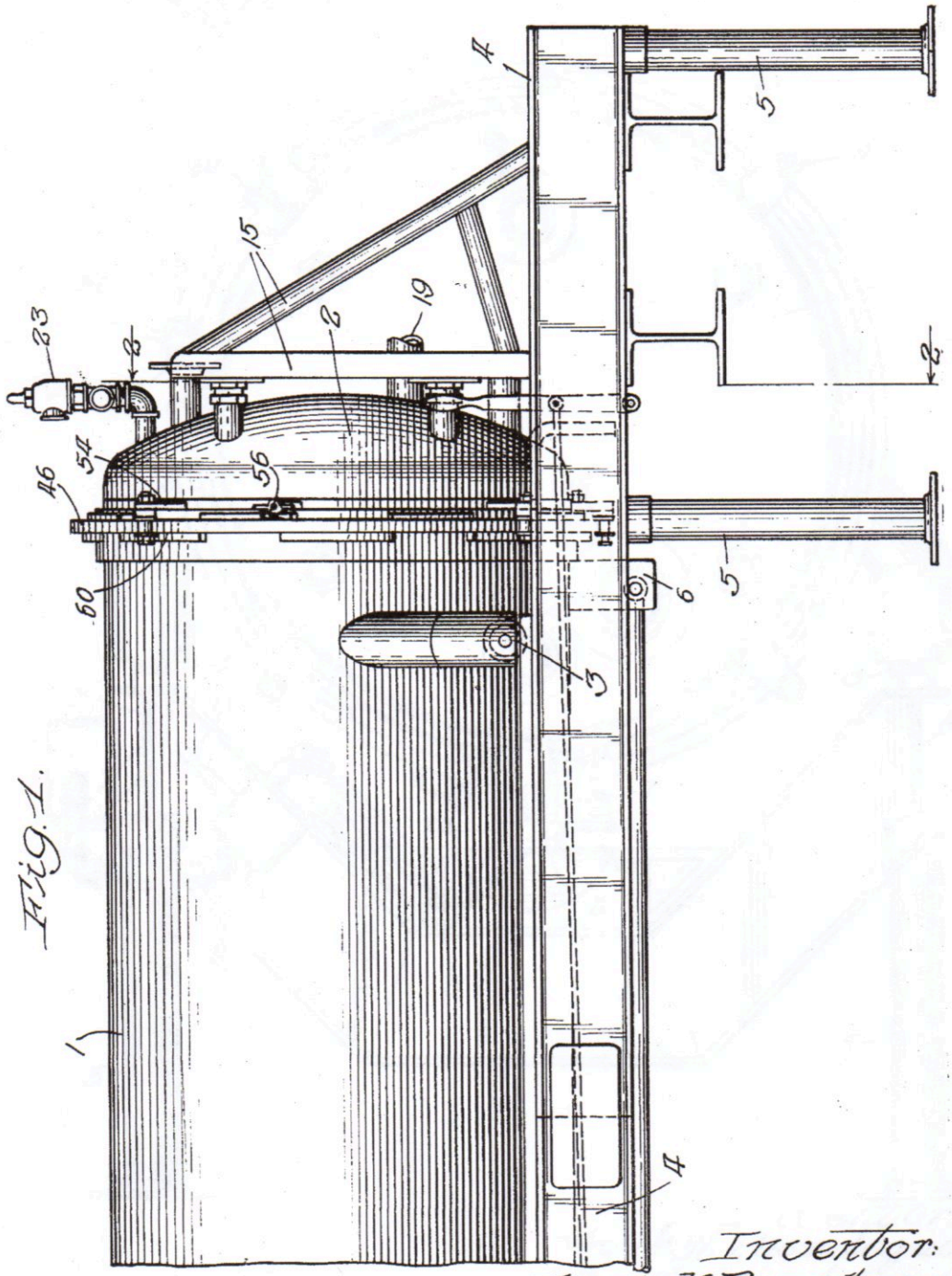

Fig. 1.

Inventor:
Frank H. Passalaqua,
By Merriam, Lonck,
Attys.

13

May 13, 1958 V. C. LYNFORD 2,834,472

SCAVENGING FILTER

Filed Aug. 12, 1955 3 Sheets-Sheet 1

Fig. 1.

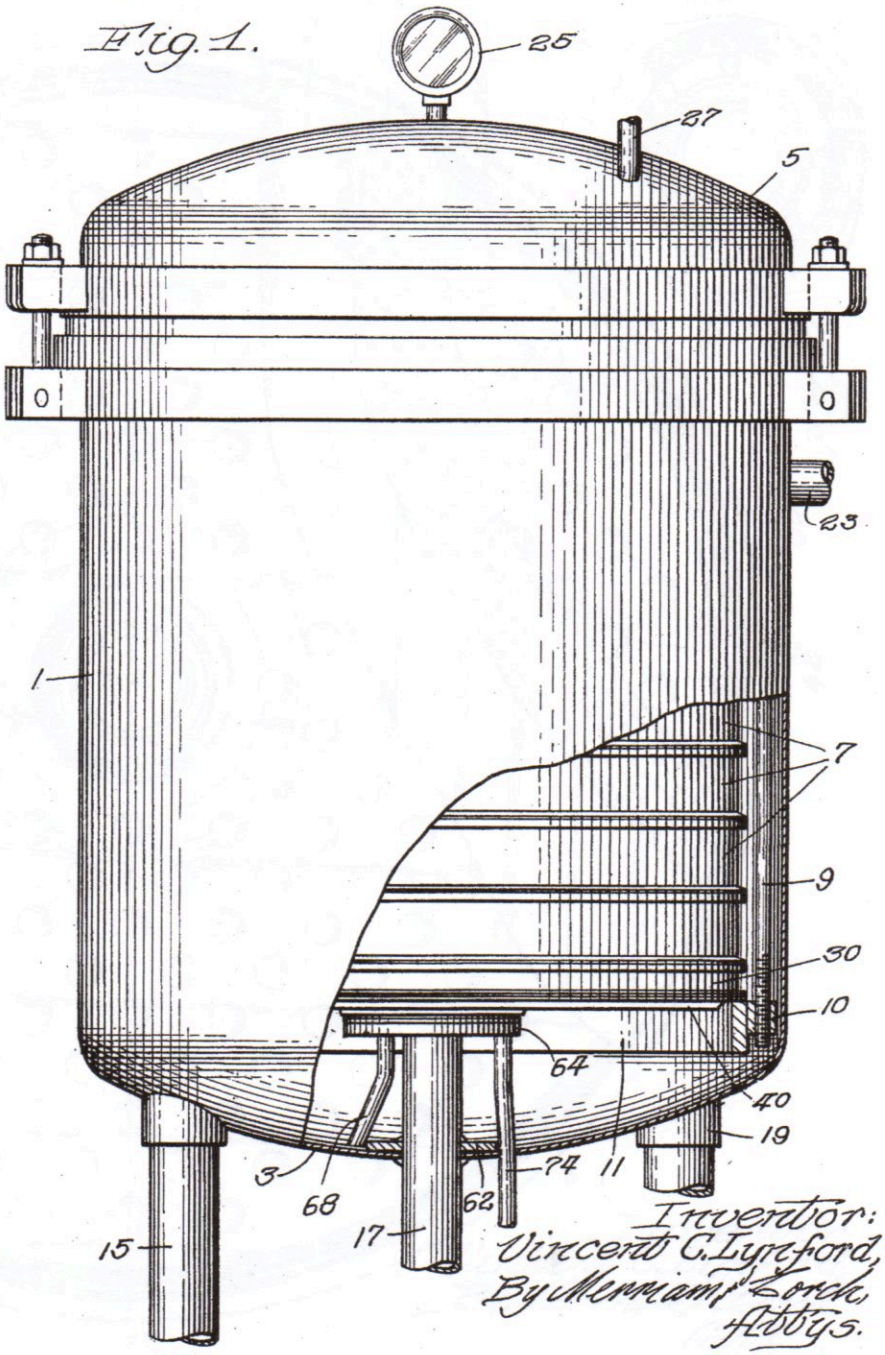

Inventor:
Vincent C. Lynford,
By Merriam, Lorch,
Attys.

July 20, 1965 A. C. KRACKLAUER ETAL 3,195,729

UNITARY ROTATABLE PRESSURE LEAF FILTER HRC

Filed March 3, 1961 HORIZONTAL ROT. CARRIAGE 3 Sheets-Sheet 1

Fig. 1.

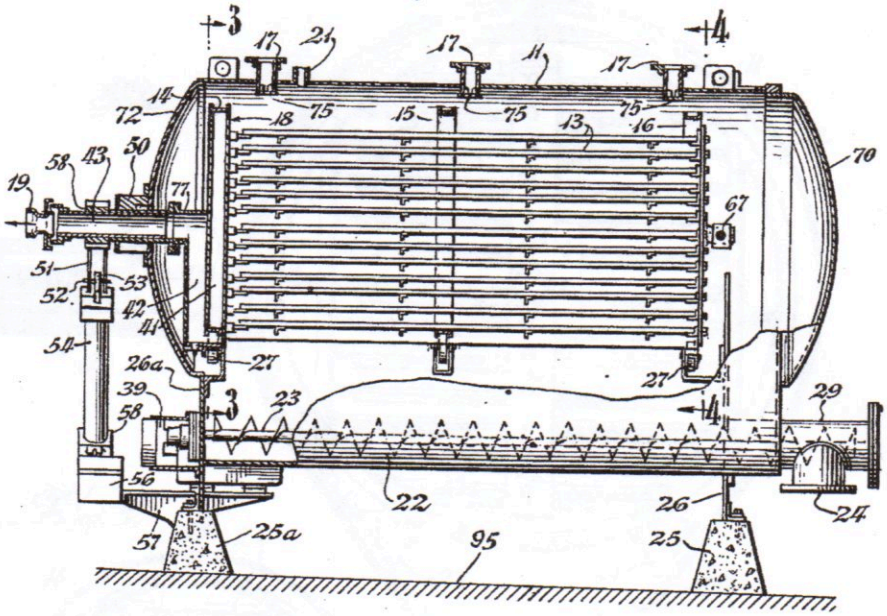

Fig. 2.

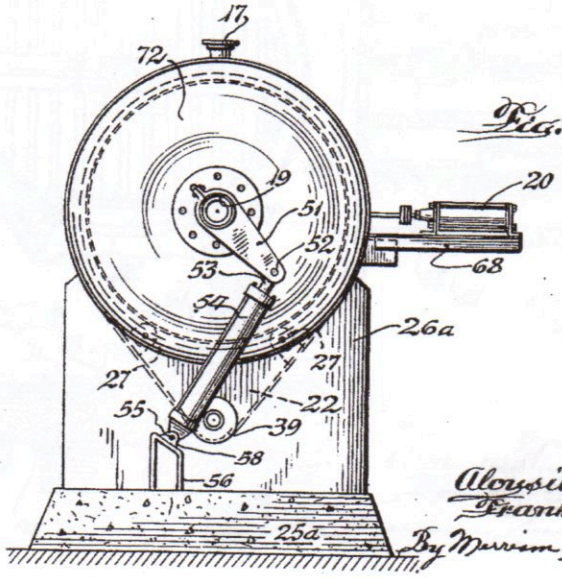

INVENTORS:
Aloysius C. Kracklauer
Frank H. Passalaqua
By Morrison, Smith & Moschel
Attorneys.

July 28, 1964 A. C. KRACKLAUER 3,142,642

PLATE FILTER AND METHOD OF MANUFACTURE

Filed April 20, 1962 2 Sheets-Sheet 1

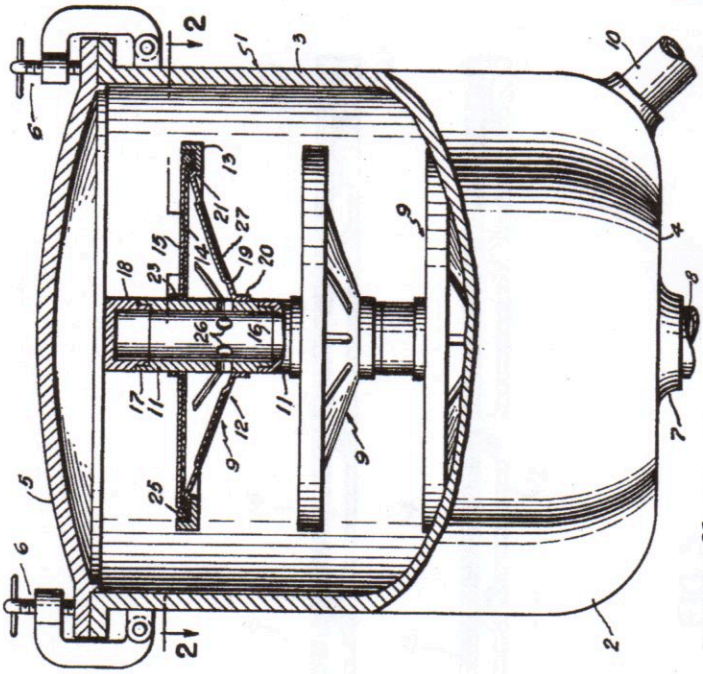

FIG. 1.

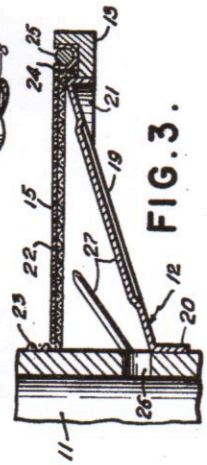

FIG. 3.

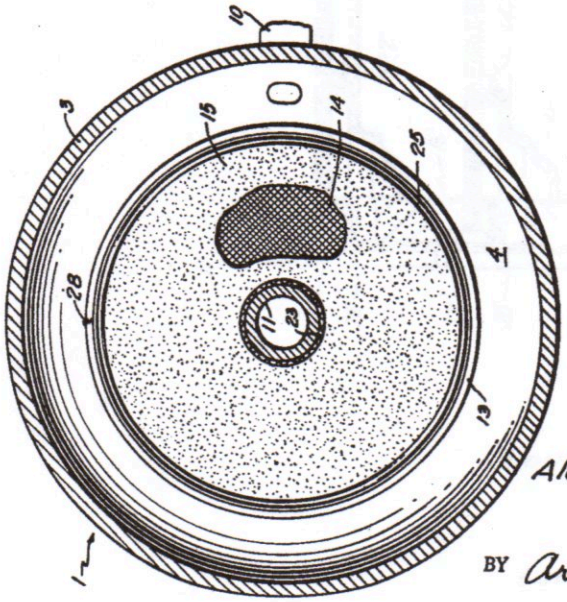

FIG. 2.

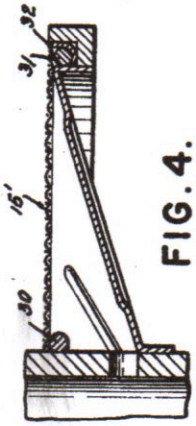

FIG. 4.

INVENTOR
Aloysius C. Kracklauer

BY Arnold and Rayfance
ATTORNEYS

Oct. 3, 1967 A. KRACKLAUER 3,344,922

APPARATUS FOR USE IN FILTERING FLUIDS

Filed May 11, 1964 2 Sheets-Sheet 1

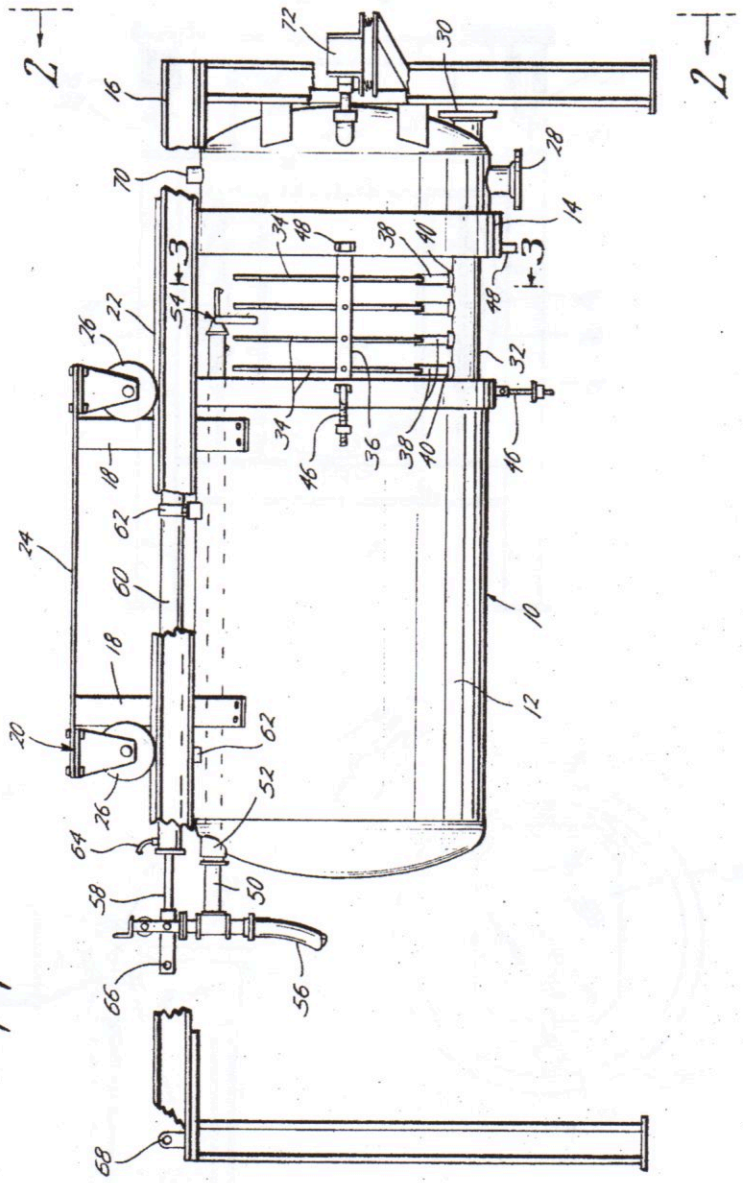

Fig. 1

Aloysius C. Kracklauer
INVENTOR.

BY Arnold & Raylance

ATTORNEYS

Sept. 5, 1967 A. C. KRACKLAUER 3,339,742

SPACED WALL FILTER ELEMENT HAVING ASSEMBLING MEANS

Filed June 17, 1964

Fig. 1

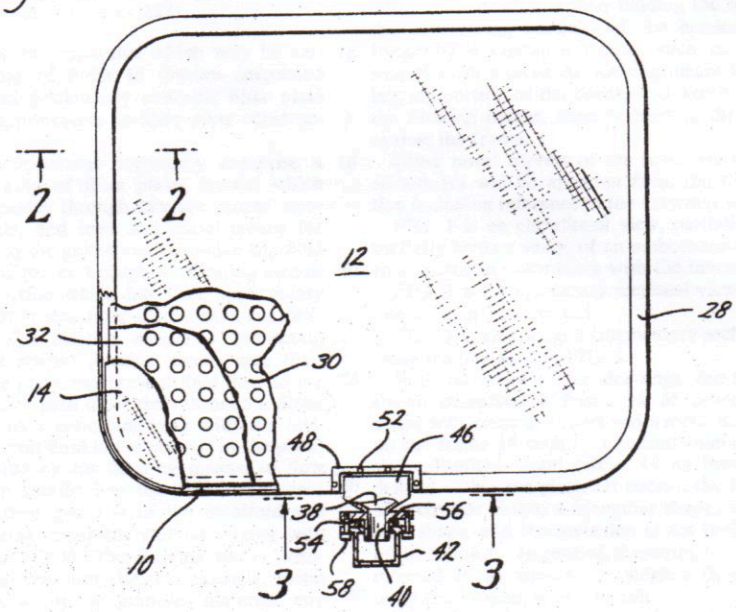

Fig. 3

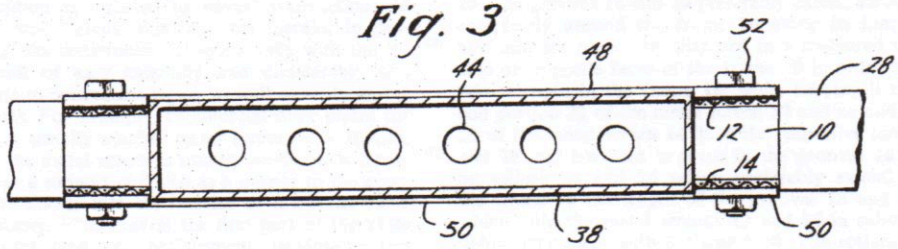

Fig. 2

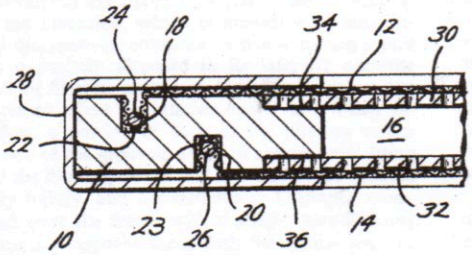

Aloysius C. Kracklauer
INVENTOR.

BY Arnold and Roylance

ATTORNEYS

June 3, 1969 A. C. KRACKLAUER 3,447,690

APPARATUS FOR REMOVAL OF FILTER CAKE

Filed May 25, 1966 Sheet 1 of 3

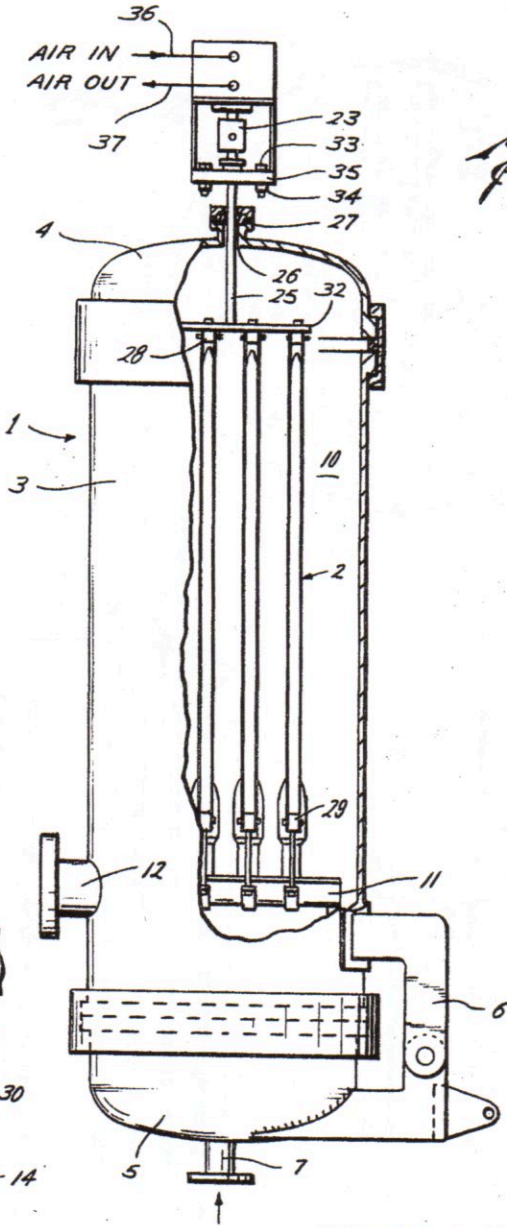

Fig. 1

Fig. 1A

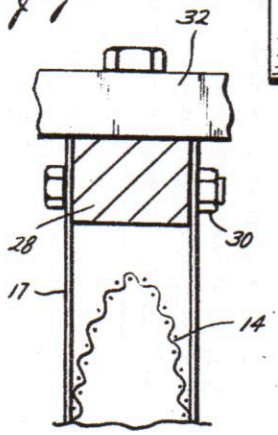

Aloysius C. Kracklauer
INVENTOR

BY Arnold and Roylance
ATTORNEYS

Feb. 18, 1969 J. T. RENEAU, JR 3,428,176

MEANS FOR DETECTING FILTER CAKE BUILDUP

Filed April 25, 1967 Sheet 1 of 2

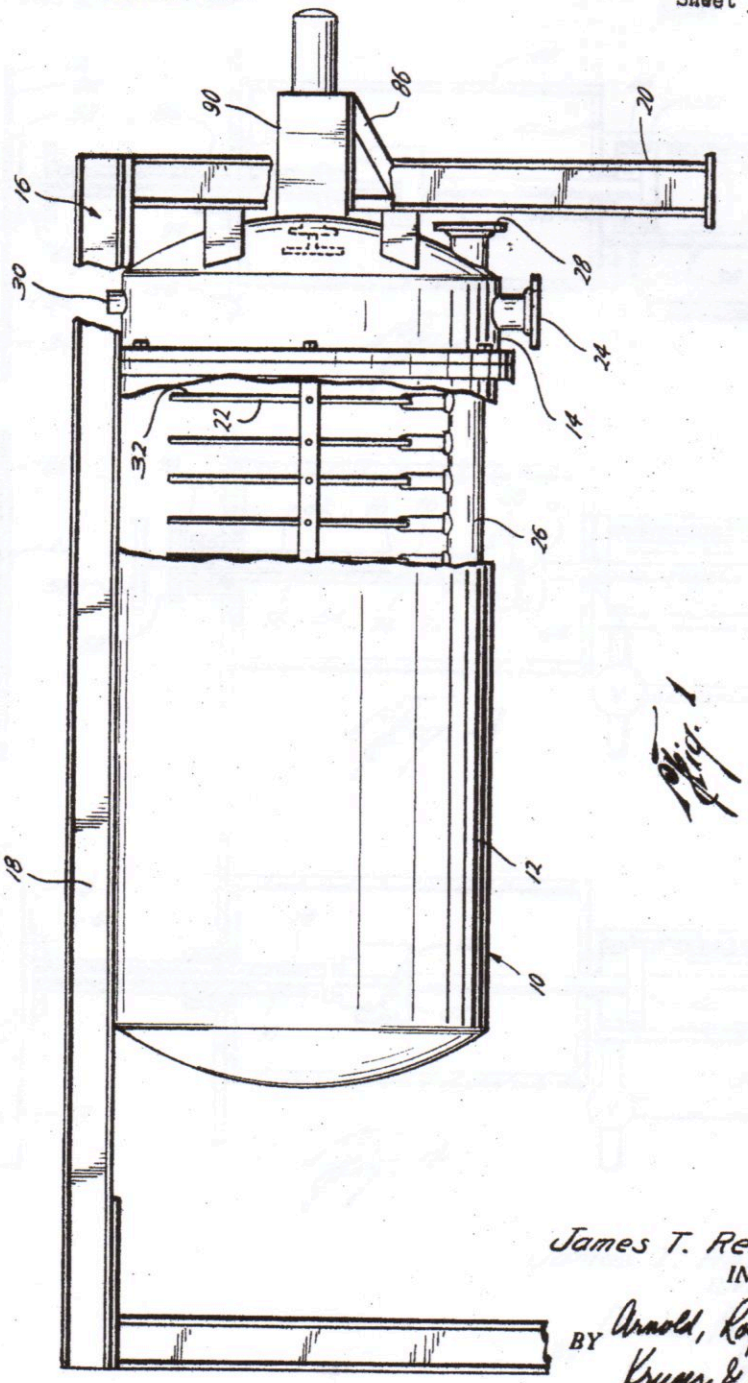

Fig. 1

James T. Reneau, Jr.
INVENTOR

BY Arnold, Roylance, Kruger & Durkee
ATTORNEYS

Dec. 16, 1969 A. C. KRACKLAUER 3,483,978

METHOD AND APPARATUS FOR MAINTAINING PLURAL FILTER PLATES IN SPACED APART RELATION

Filed Sept. 5, 1968

Fig. 1

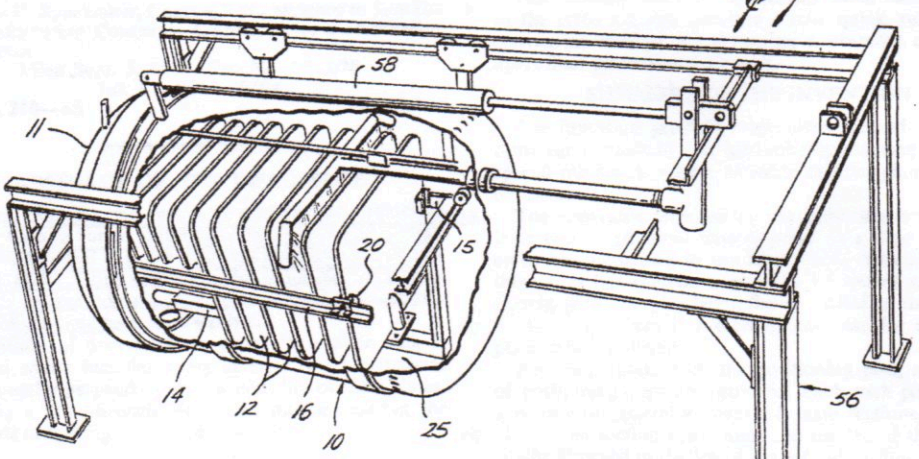

Fig. 2

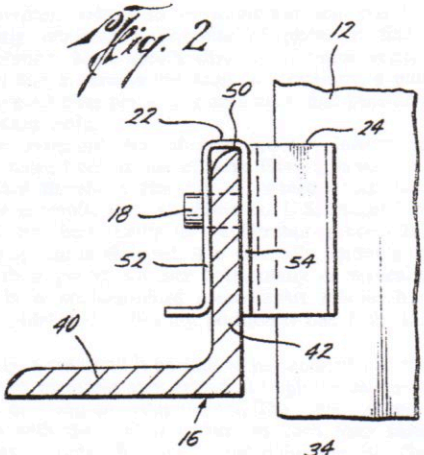

Fig. 3

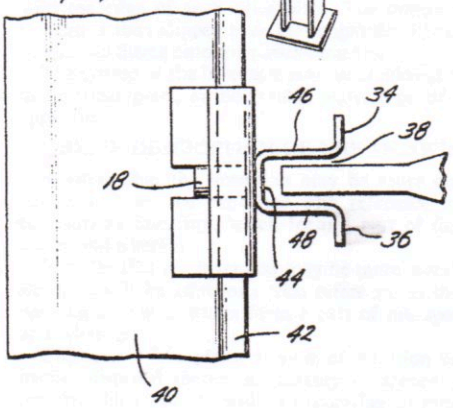

Fig. 4

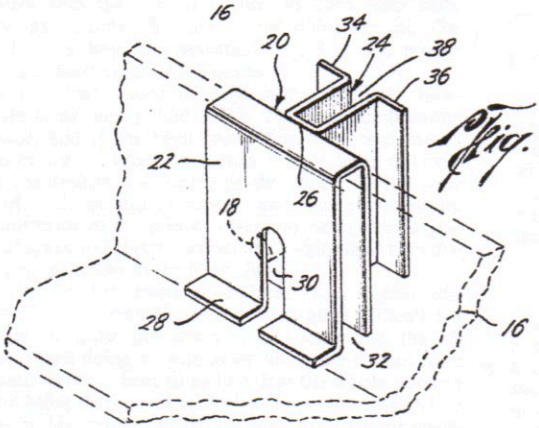

Aloysius C. Kracklauer
INVENTOR

BY Arnold, Roylance, Kruger & Durkee
ATTORNEYS

United States Patent

Kracklauer

[15] **3,655,049**

[45] **Apr. 11, 1972**

[54] **METHOD AND APPARATUS FOR RETAINING AND DISLODGING FILTER CAKE**

[72] Inventor: **Aloysius C. Kracklauer,** Conroe, Tex.

[73] Assignee: **Sparkler Manufacturing Company,** Conroe, Tex.

[22] Filed: **Nov. 19, 1970**

[21] Appl. No.: **91,097**

[52] **U.S. Cl.** **210/81,** 210/333, 210/388, 210/DIG. 18

[51] **Int. Cl.** **B01d 25/34**

[58] **Field of Search** 210/DIG. 18, 388, 81, 82, 331, 210/327, 333, 332

[56] **References Cited**

UNITED STATES PATENTS

3,447,690 6/1969 Kracklauer .....210/388 X

Primary Examiner—Jim DeCesare

Attorney—Arnold, White & Durkee, Tom Arnold, Robert A. White, Bill Durkee, Frank S. Vanden, III, Louis T. Pirkey and John F. Lynch

[57] **ABSTRACT**

A porous screen fitted adjacent a vertical plate filter, in close proximity therewith, and means for oscillating or agitating the screen are provided, so that the screen acts to dislodge the filter cake which builds up on the filter plate. A method of dislodging a filter cake is provided which includes oscillation of a screen located adjacent a vertical plate filter having filtering media thereon for filtering fluids, and then continued oscillation of the screen while at the same time expanding the filtering media toward the screen and washing the filtering media with water.

8 Claims, 5 Drawing Figures

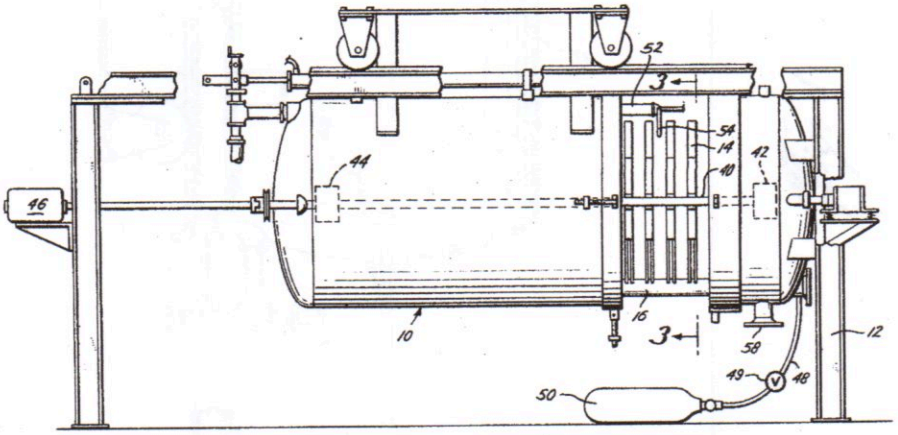

United States Patent [19]

Kracklauer

[11] **3,756,411**

[45] **Sept. 4, 1973**

[54] **CONTINUOUS BELT-TYPE GRAVITY FILTRATION APPARATUS**

[75] Inventor: **Aloysius C. Kracklauer,** Conroe, Tex.

[73] Assignee: **Sparkler Manufacturing Company,** Conroe, Tex.

[22] Filed: **July 14, 1971**

[21] Appl. No.: **162,604**

[52] **U.S. Cl.** **210/179,** 210/393, 210/401

[51] **Int. Cl.** **B01d 35/18,** B01d 33/04

[58] **Field of Search** 210/68, 179, 393, 210/400, 401

[56] **References Cited**

UNITED STATES PATENTS

3,440,949	4/1969	Trussell	210/400 X
1,876,123	9/1932	Wright	210/401 X
3,437,210	4/1969	O'Neill	210/393 X
3,375,932	4/1968	Ishigaki	210/401 X
3,254,768	6/1966	Shimizu	210/401 X
2,876,904	3/1959	Fowler	210/401 X
620,786	3/1899	Koerper et al.	210/401 X

Primary Examiner—Samih N. Zaharna
Assistant Examiner—Robert H. Spitzer
Attorney—Tom Arnold et al.

[57] **ABSTRACT**

A continuous belt-type gravity filtration system is provided which includes in the embodiments disclosed a series of cylindrical rollers around which a continuous belt in the form of a filter media is driven. The rollers provided include one wherein the filter belt is precoated, another which comprises a filter vessel and wherein filtration takes place depositing a filter cake on the filter belt, and another which comprises a heating drum to dry the filter cake. A system is provided for removing dry filter cake from the filter belt, and another system is provided to seal the filter belt as it contacts the filter vessel.

6 Claims, 3 Drawing Figures

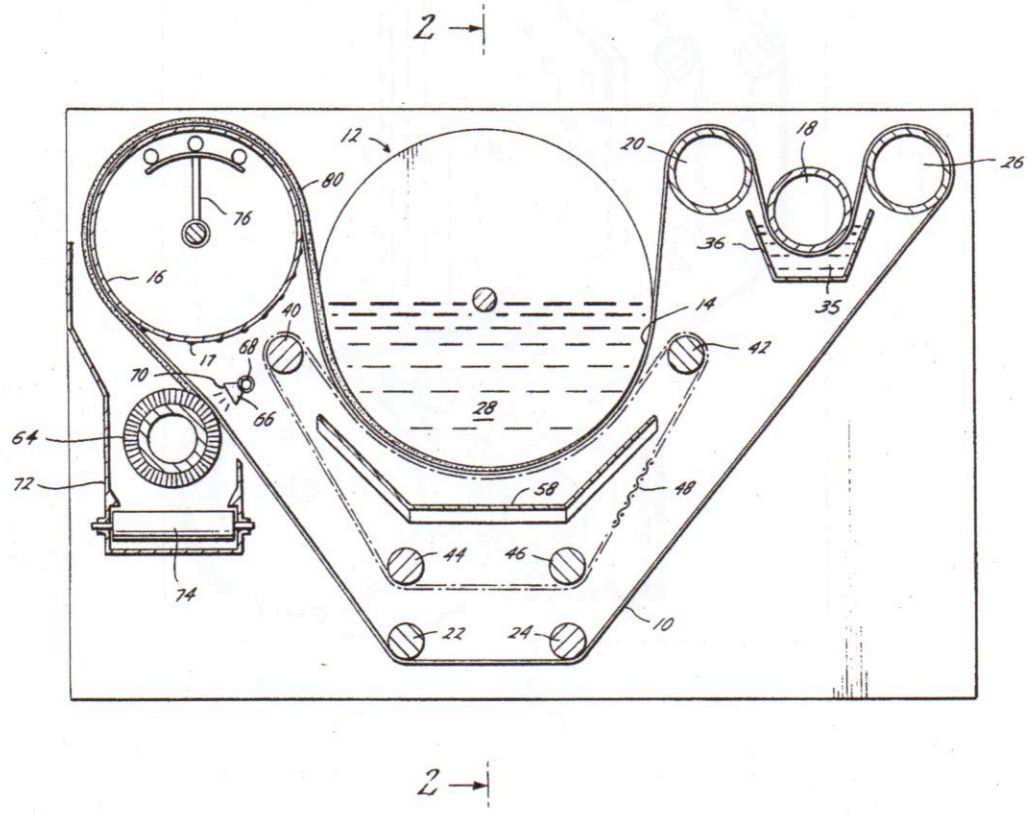

United States Patent [19]

Kracklauer

[11] **4,057,437**

[45] **Nov. 8, 1977**

[54] **CONTINUOUS BELT FILTER AND FILTRATION METHOD**

[75] Inventor: **Aloysius C. Kracklauer**, Conroe, Tex.

[73] Assignee: **Sparkler Mfg. Co.**, Conroe, Tex.

[21] Appl. No.: **694,166**

[22] Filed: **June 9, 1976**

[51] **Int. Cl.**[2] **C13D 3/16**; B01D 33/02; B01D 33/18; B01D 33/34

[52] **U.S. Cl.** **127/9**; 127/2; 127/55; 210/386; 210/393; 210/401; 210/406

[58] **Field of Search** 127/9, 55, 3, 2, 43; 210/179, 386, 393, 401, 406, 66, 67, 79, 407

[56] **References Cited**

U.S. PATENT DOCUMENTS

693,896	2/1902	Parker	210/391
2,678,132	5/1954	Beard	127/55 X
3,225,928	12/1965	Black	210/393 X
3,627,139	12/1971	Burtsev	210/393
3,756,411	9/1973	Kracklauer	210/179
3,796,317	3/1974	Lippert	210/393

Primary Examiner—Sidney Marantz
Attorney, Agent, or Firm—Arnold, White & Durkee

[57] **ABSTRACT**

An endless belt gravity filtration apparatus which includes a vacuum system for removing filter cake and for cleaning and keeping filter belt porous through reverse air flow on the endless belt filter. The belt filter has extensions along each of its continuous edges, these extensions having chains which mate with sprockets on the filter chamber to assist in driving the filter belt and to keep it aligned and from being stretched or wrinkled during the filtration process. The apparatus may be used for filtering fluids such as sugar cane juice.

9 Claims, 4 Drawing Figures

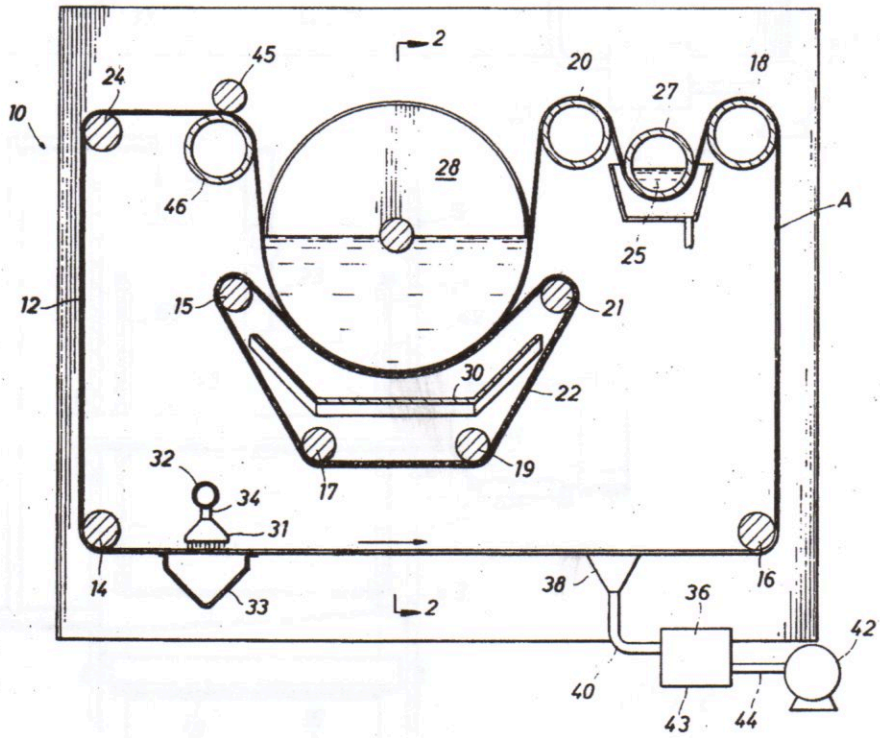

US005139667A

United States Patent [19]

Reneau, Jr.

[11] **Patent Number: 5,139,667**

[45] **Date of Patent: Aug. 18, 1992**

[54] **NUTSCHE PROCESS FILTER DRIVE UNIT**

[75] Inventor: **James T. Reneau, Jr.**, Willis, Tex.

[73] Assignee: **Sparkler Filters, Inc.**, Conroe, Tex.

[21] Appl. No.: **823,252**

[22] Filed: **Jan. 21, 1992**

Related U.S. Application Data

[60] Division of Ser. No. 749,143, Aug. 23, 1991, which is a continuation of Ser. No. 569,940, Aug. 17, 1990, abandoned, which is a continuation of Ser. No. 286,959, Dec. 20, 1988, abandoned.

[51] **Int. Cl.**[5] **B01F 7/00**; B03B 5/36

[52] **U.S. Cl.** **210/319**; 366/286; 366/289

[58] **Field of Search** ..... 366/285, 286, 289, 193, 366/332, 333, 334, 78; 74/22 R, 22 A; 210/319, 738

[56] **References Cited**

U.S. PATENT DOCUMENTS

2,540,474	2/1951	Cox	210/319
3,355,153	11/1967	Nolte	366/286
4,074,362	2/1978	Kruder	366/289
4,163,723	8/1979	Romano	210/319
4,290,701	9/1981	Schad	366/78
4,824,255	4/1989	Wohlrab	366/289

Primary Examiner—Robert W. Jenkins
Attorney, Agent, or Firm—Arnold, White & Durkee

[57] **ABSTRACT**

A drive unit for a nutsche filter which includes a drive shaft assembly and an impeller shaft assembly which rotate together but which telescope relative to one another. Moving parts of the overall drive shaft assembly are enclosed for protection from corrosion and wear problems. The drive unit is supported above a filter vessel and enters the vessel through a sealed opening.
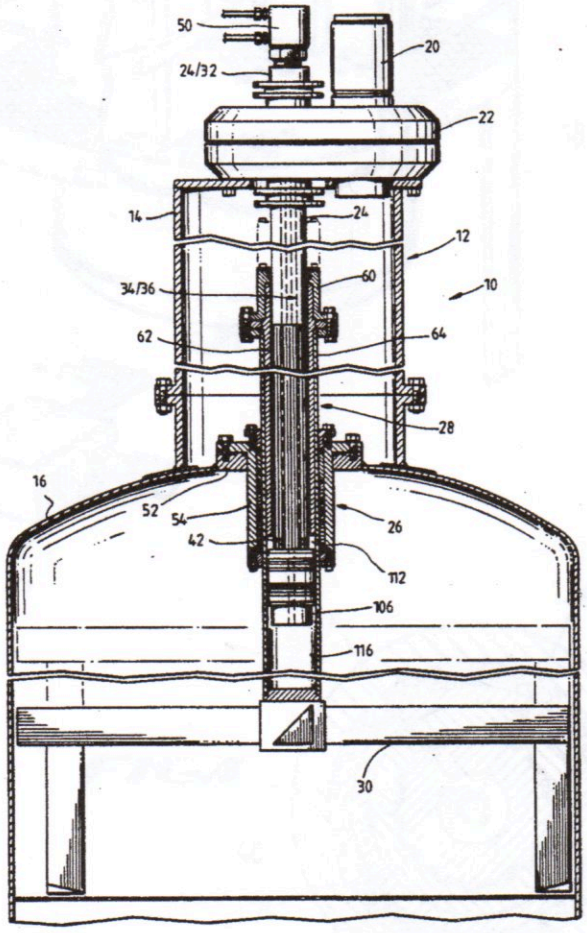
11 Claims, 4 Drawing Sheets